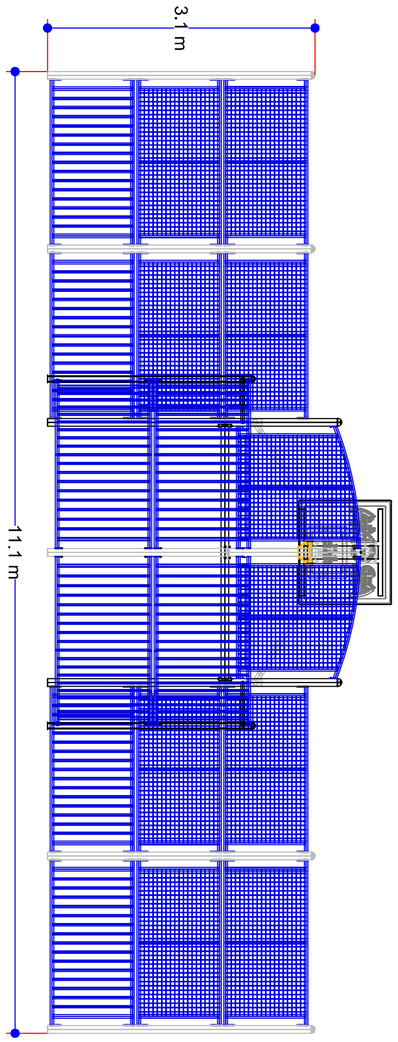

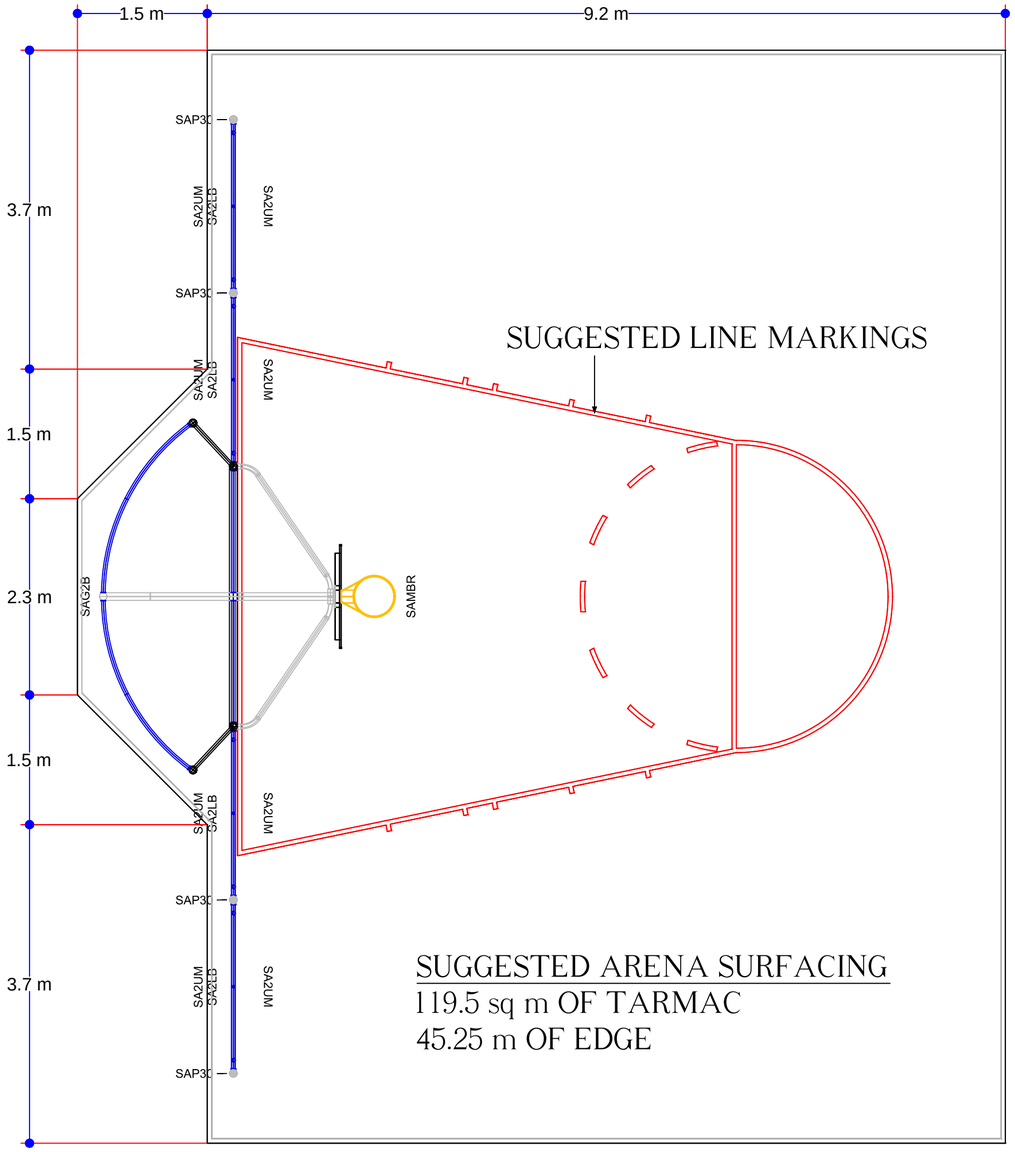

SUGGESTED ARENA SURFACING
119.5 sq m OF TARMAC
45.25 m OF EDGE

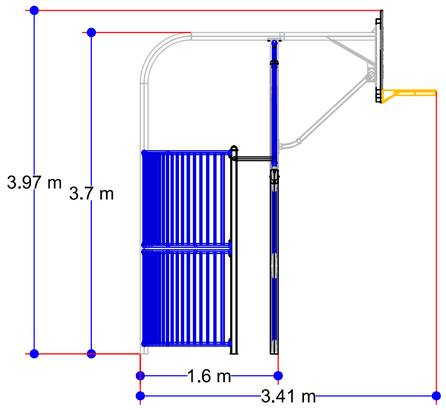

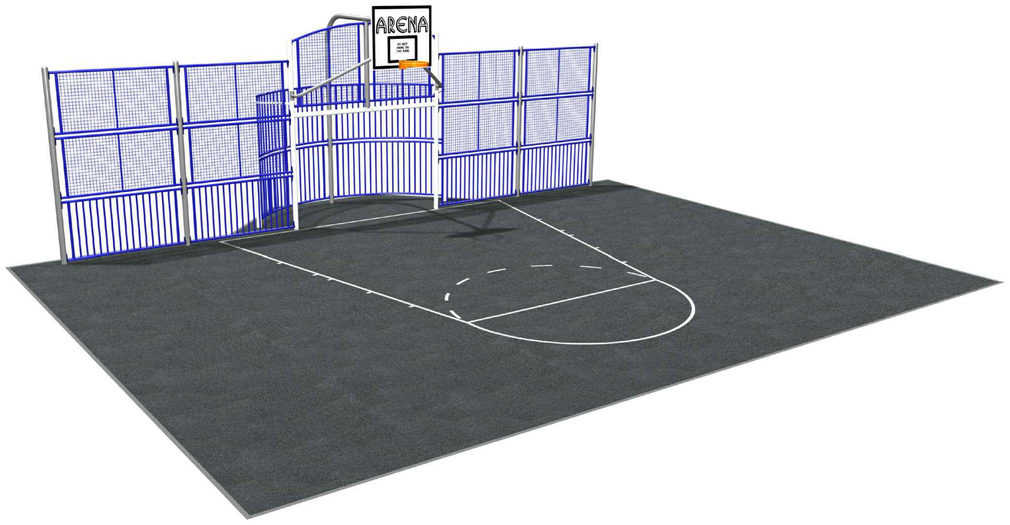

ARENA Sports SYSTEM

Components List

ARENA VANCOUVER (SA-VA)
Drawing No:39542_Item1

Code	Description	Qty	Extended Weight (kgs)	Extended Concrete
SA2LB	LOWER BAR FRAME 2M	4	158.40	0.00
SA2UM	UPPER MESH FRAME 2M	8	252.80	0.00
SAG2R	GOAL SECTION + REBOUND	1	426.00	1.01
SAMBR	1.2M REACH BOARD & HOOP	1	94.47	0.00
SAP30	3.0M HIGH POST	4	104.00	0.25
		18	1,035.67	1.26

ARENA STEELWORK COLOURS TO BE CONFIRMED WITH ORDER

REFER TO ARENA INSTALLATION INSTRUCTIONS FOR COMPONENT ID AND INSTALLATION

NOTES

DIMENSIONS SHOWN FOR TARMAC ARE TAKEN FROM THE OUTSIDE OF THE PRE-CAST CONCRETE EDGE. DIMENSIONS SHOWN FOR EQUIPMENT ARE TAKEN FROM THE OUTERMOST FACE.

REVISION

04/10/07 -	Original	ISSUE A
04/06/10 -	Amendment by J.F. Check by N.B. Border amended for international use.	ISSUE B

CUSTOMER

PROJECT

TITLE

ARENA SPORTS SYSTEM
VANCOUVER SA-VA

DATE 04/10/07	SCALE 1:50 @ A2
DRAWN BY : N.B.	CHECKED BY : J.C.

DRAWING No. 39542 ISSUE B

SHEET 1 OF 1

© PLAYPOWER INC. 2010